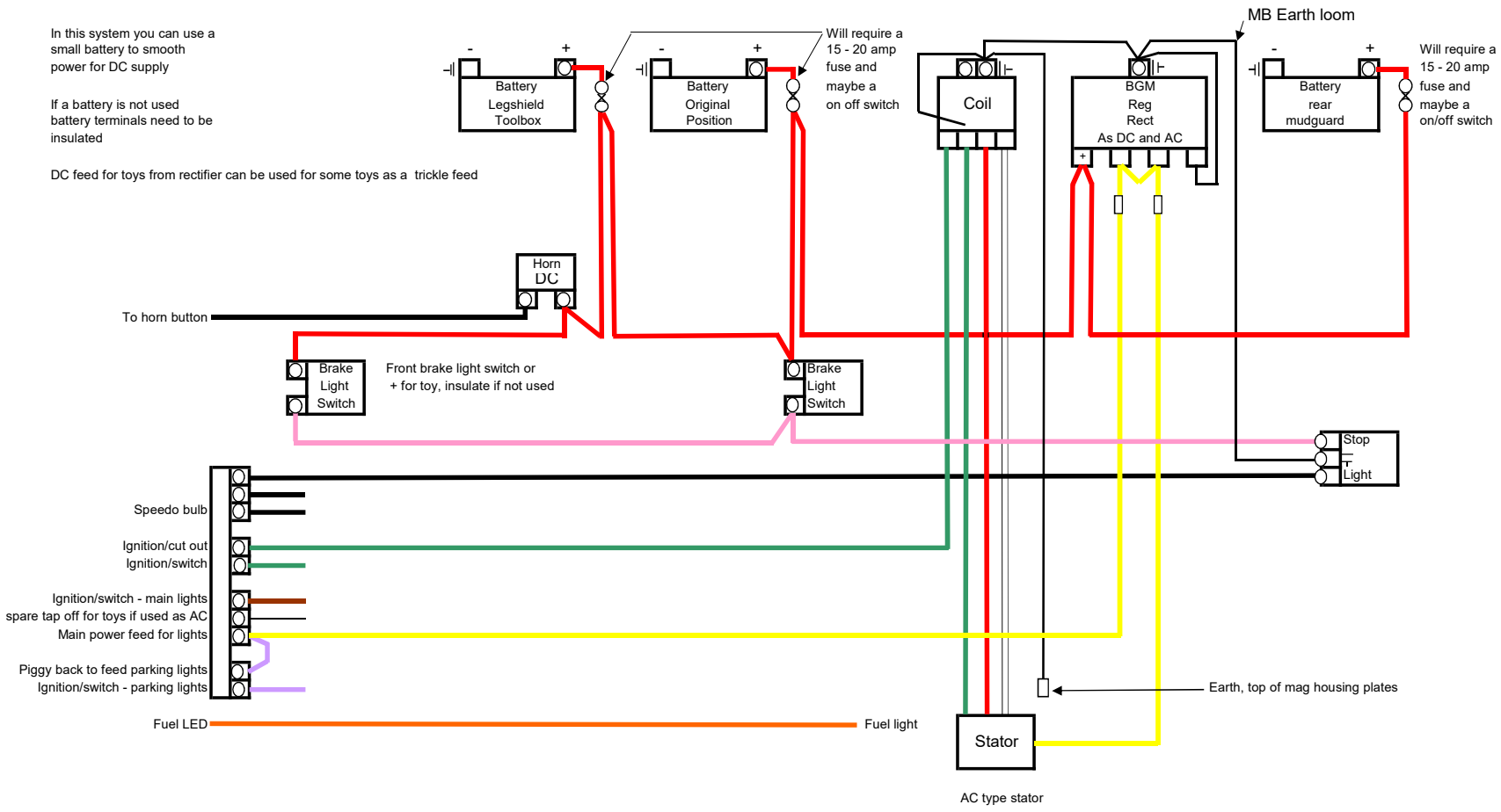# ELECTRONIC WIRING LOOM - BGM AC and DC 12 volt (trickle charge version) using MB Looms MRB0803K/MRB0804K